Networks connect Nature and Nurture

Ehud Lamm

The Cohn Institute for the History and Philosophy of Science and Ideas
Tel-Aviv University

‘Scale free’ Networks

Scale-free (**power-law**) degree distribution

Small number of highly connected **hubs**

Can be the result of **preferential linking**

Random subnets from scale-free networks are not scale-free, and vice versa (de Silva & Stumpf 2005)

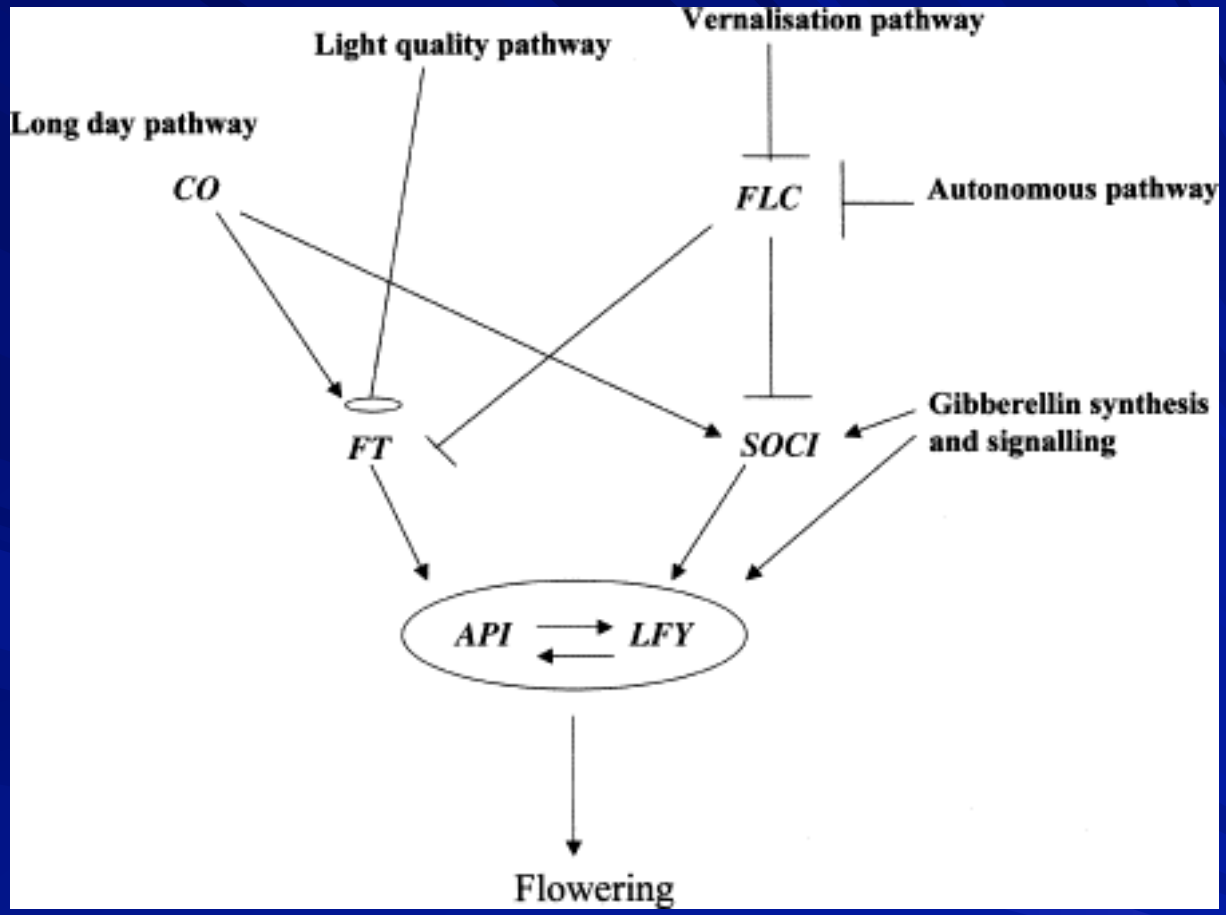

The network that governs initiation of flowering in *Arabidopsis*.

Wilkins, 2005

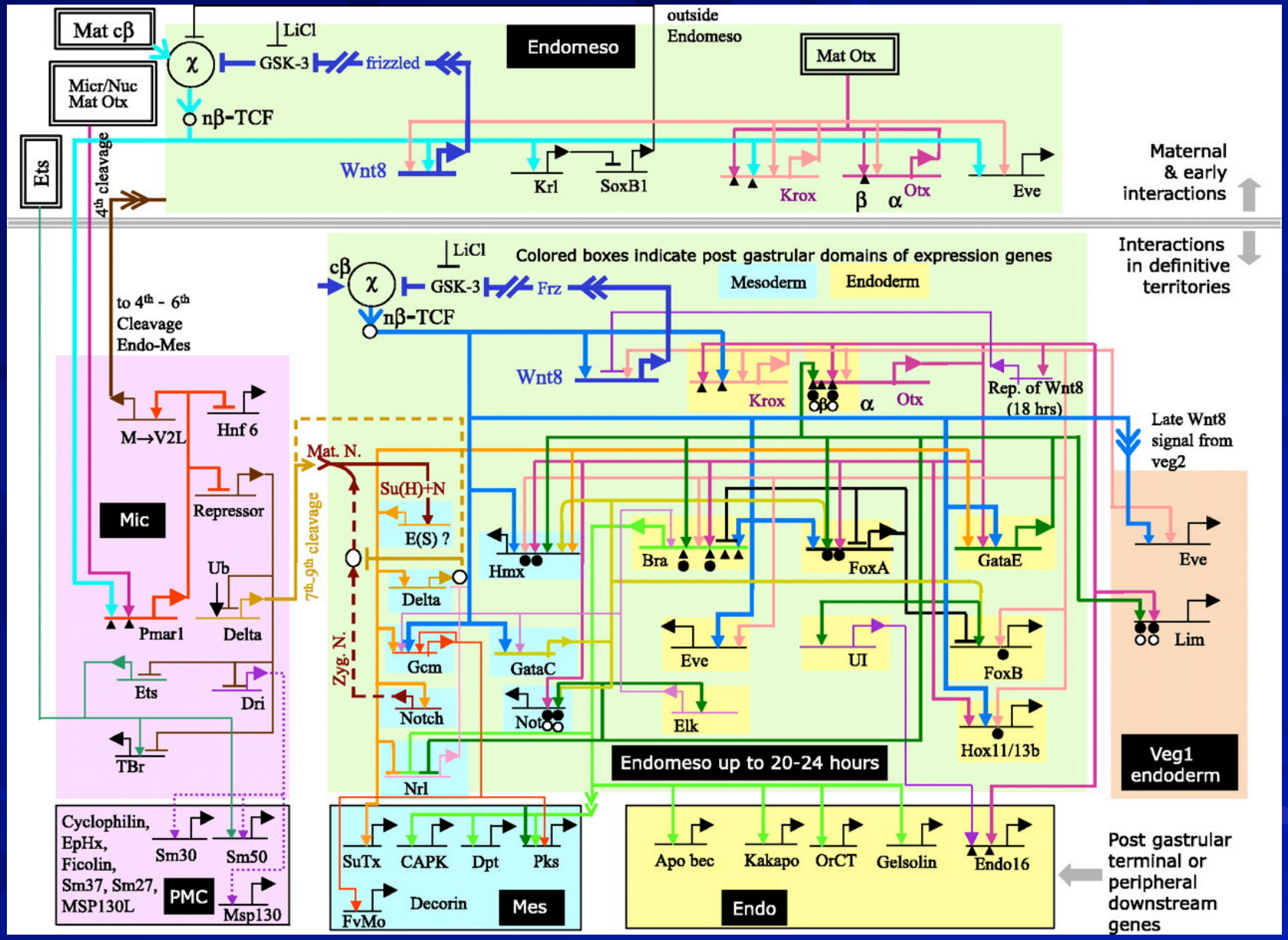

Endomesoderm specification, view from the genome

Davidson et al. *Science*, 2002

lac operon

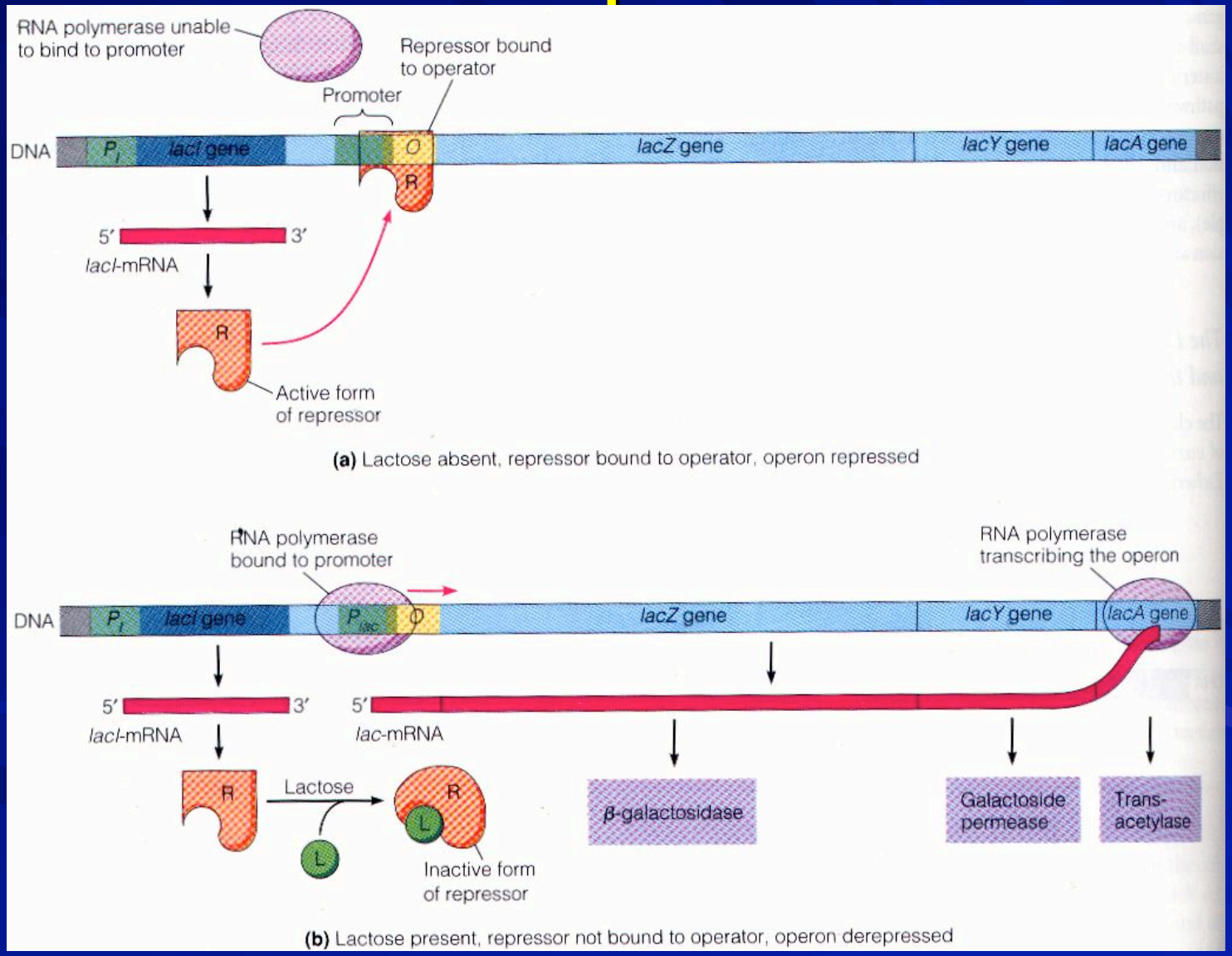
RNA polymerase unable to bind to promoter
Repressor bound to operator
Promoter
DNA
P_I
lacI gene
O
lacZ gene
lacY gene
lacA gene
R
5′
3′
lacI-mRNA
R
Active form of repressor
(a) Lactose absent, repressor bound to operator, operon repressed
RNA polymerase bound to promoter
RNA polymerase transcribing the operon
DNA
P_I
lacI gene
P_{lac}
O
lacZ gene
lacY gene
lacA gene
5′
3′
lacI-mRNA
5′
lac-mRNA
R
Lactose
L
R
L
Inactive form of repressor
β-galactosidase
Galactoside permease
Trans-acetylase
(b) Lactose present, repressor not bound to operator, operon derepressed

Network-like phenomena

- Gene regulatory nets (TFs), protein interaction nets, metabolic nets, developmental genetic nets
- Immunological interactions, hormonal nets, neural nets; Ecological nets, epidemiological nets, etc. etc.
- And the networks are all interwoven (and hierarchical). The concrete networks we study are samples (and biased samples, at that).

“Real” Networks

- Stabilized regulatory states (differentiation)
- Combine sub circuits that may have evolved independently and at different rates
- Duplication events (e.g., Olson 2006)
- Redundancy, “overlayered circuit design”
- Genome organization
- Cross-organism networks
- Epigenetic network changes

Cross Organism Networks

Mitochondria

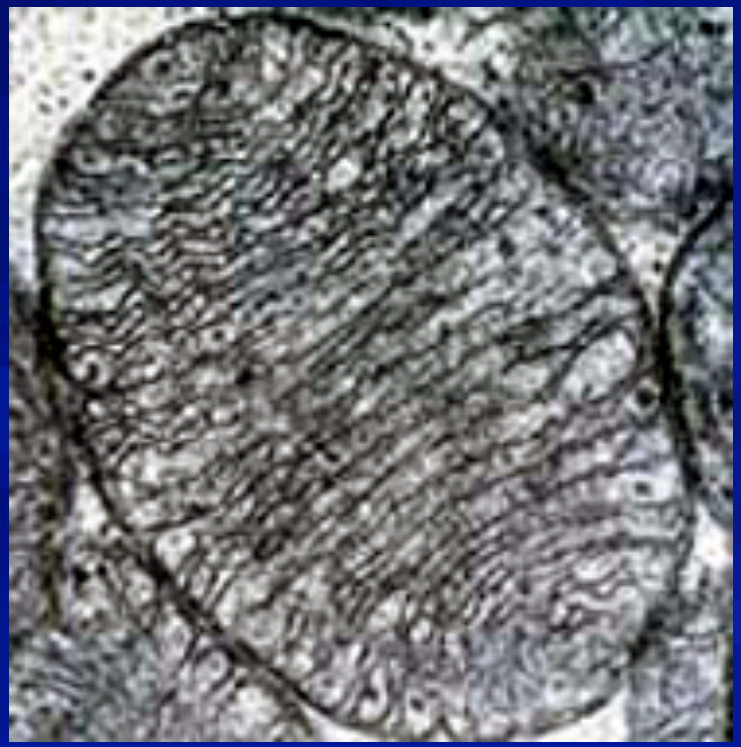

Cross Organism Networks

Bacteria-Legume Symbiosis

A important distinction

- Connections that *can* occur in the net
- Connections that *are* happening at time *t*

- Davidson calls these "the view from the genome" vs. "the view from the nucleus".
- A "program" vs. its execution path

We should clearly distinguish between the two.

- Deciding on network boundaries determines the network connections found.

- Network change
  - Are methylations (chromatin remodeling, etc.) considered changes to (or *of*) the network or as the same network at a different *state*?
  - Which elements are part of the regulatory network and which are "parameters“ or “inputs”?

The “state”/”structure” and “regulation”/”input” distinctions are highly problematic.

Tentative Conclusion (1)

Concentrate efforts on cross-organism networks, that change over time due internal and external stimuli.

The evolutionary paradigm determines the network (and vice-versa)

Development Constructs Heredity

- Stress can lead to large-scale genomic repatterning
  - Nutritional stress in flax (Cullis 2005)
  - Heat shock in *Brassica* (Waters&Schaal 1996)
  - Hydrostatic pressure in rice (Long et al. 2006)
- Genomic stress following hybridization and polyploidization can have similar effects
  - Wide range of examples in plants
  - Mobile elements activated by hybridization in *Drosophila* and target non-randomly (Evgen'ev et al. 2000)

Mechanisms

- Many epigenomic mechanisms are implicated
  - Methylation
  - Transposable elements
  - Histone modifications
  - The RNAi system
  - Activated in both environmental *and* genomic stress
- Often responses to stress are predictable and repeatable [as well as systemic - Manfred Heinlein]
- Ancient eukaryotic features, involving epigenetic control mechanisms (Zuffal et al. 2005)

Tentative Conclusion (2)

Developmentally induced hereditary changes are possible results of environmental and genomic stress of various kinds.

The Genome is a Developmental Unit

- The "Waddingtonian view"
  - Generic properties of genes are the result of generic properties of the way the *specific* developmental systems we encounter work.
- The "Mendelian view"
  - The generic properties of the genetic system are the result of the developmental behavior of the genomic system.

Tentative Conclusion (3)

When genomes interact the result is a developmental response.

The Three Pillars

- Networks should be generalized
- Development constructs heredity

  possibly, in cross-organism networks
- Heredity requires us to understand the genome as a developmental unit

  specifically, when studying developmental responses to foreign genomes

Parallel dualities

- Development – Heredity
- Genetic – Epigenetic
- Plasticity – Evolvability
- “inside” – “outside”
- Generation boundaries

➔ “Nature” – “Nurture”

The frontiers that exist between the studies of heredity, development and infection are… technical and arbitrary, and new possibilities of analysis and experiment will arise when we have learnt the passwords to take us across them.

– C. Darlington (1944), Heredity, Development and Infection, *Nature* 154

Acknowledgements

- Prof. Eva Jablonka

- School of Philosophy, Tel Aviv University
- The Cohn Institute for the History and Philosophy of Science and Ideas

Discussion

References

- Cullis, C. A. (2005). Mechanisms and control of rapid genomic changes in flax. *Annals of Botany*, *95*, 201-206.
- Davidson, E. H. et al. (2002), A Genomic Regulatory Network for Development, *Science*, 295:1669-1678.
- Dubrova, Y. E. (2003). Radiation-induced transgenerational instability. *Oncogene*, 22, 7087-7093.
- Evgen'ev, M. B. et al. (2000), Mobile elements and chromosomal evolution in the *virilis* group of *Drosophila, PNAS* 97(21):11337-42.
- Long, L. K., Lin, X., Zhai, J., Kou, H., Yang, W., & Liu B. (2006). Heritable alteration in DNA methylation pattern occurred specifically at mobile elements in rice plants following hydrostatic pressurization. *Biochemical and Biophysical Research Communications*, *340*, 369-376.
- Molinier, J., Ries, G., Zipfel, C., & Hohn, B (2006). Transgeneration memory of stress in plants. *Nature*, *442*, 1046-1049.
- de Silva, E. and Stumpf, M. P. H. (2005) Complex networks and simple models in biology, *J.Roy.Soc. Interface* 2:419-430.
- Waters, E. R., & Schaal, B. A. (1996). Heat shock induces a loss of rRNA-encoding DNA repeats in Brassica nigra. *Proceedings of the National Academy of Sciences USA, 93*, 1449-1452.
- Wilkins, A. (2005) Recasting developmental evolution in terms of genetic pathway and network evolution… and the implications for comparative biology, *Brain Research Bulletin* 66:495-509.
- Zufall, R. A., Robinson, T., & Katz, L. A. (2005). Evolution of developmentally regulated genome rearrangements in eukaryotes. *Journal of Experimental Zoology Part B-Molecular and Developmental Evolution, 304B*, 448-455.